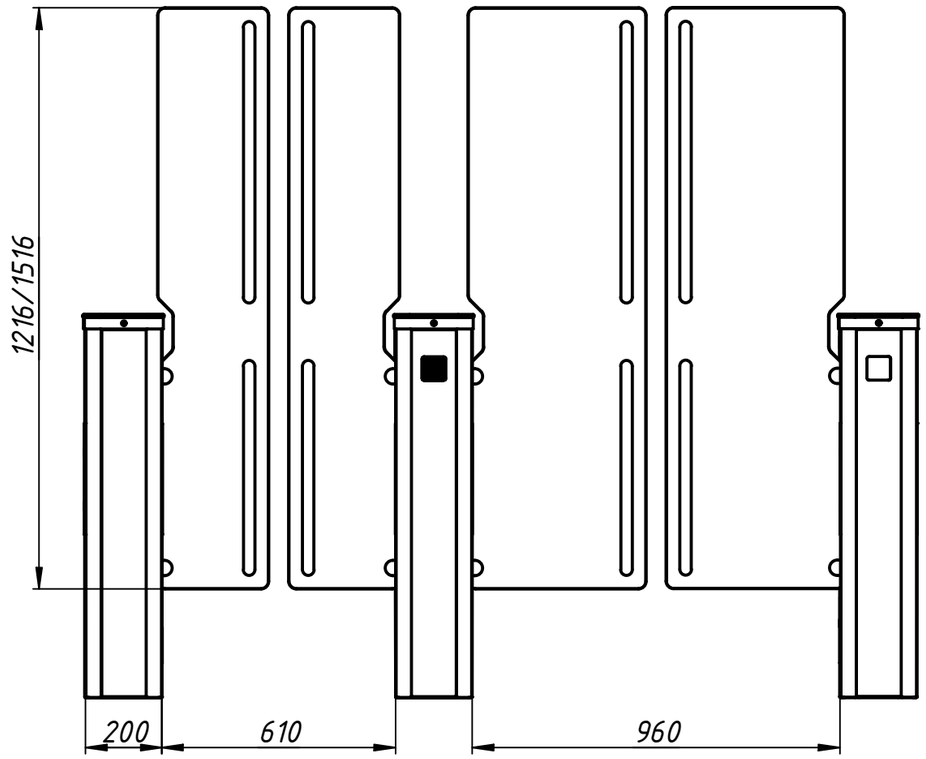

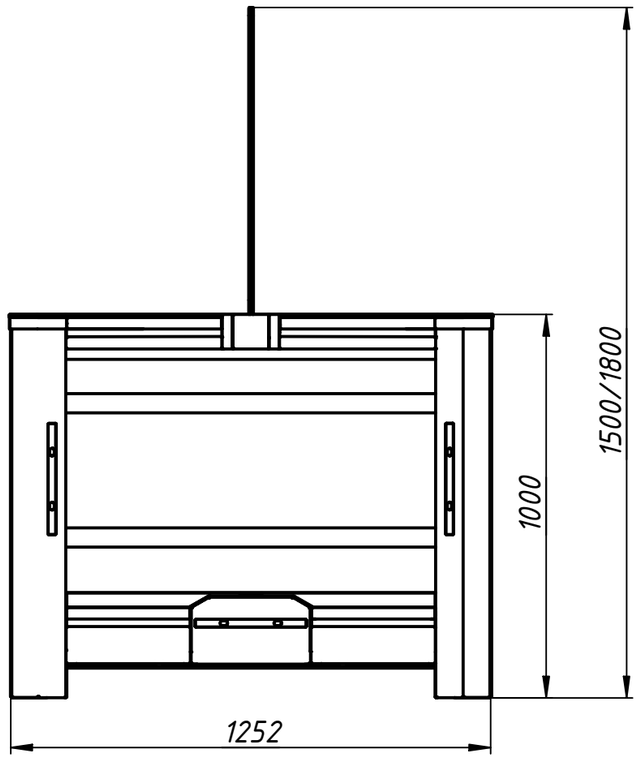

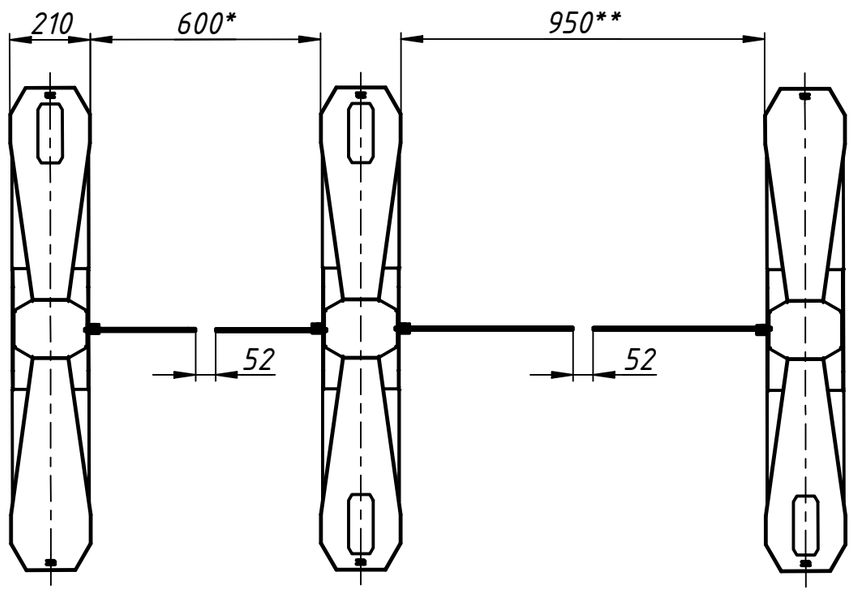

Installation tamplate

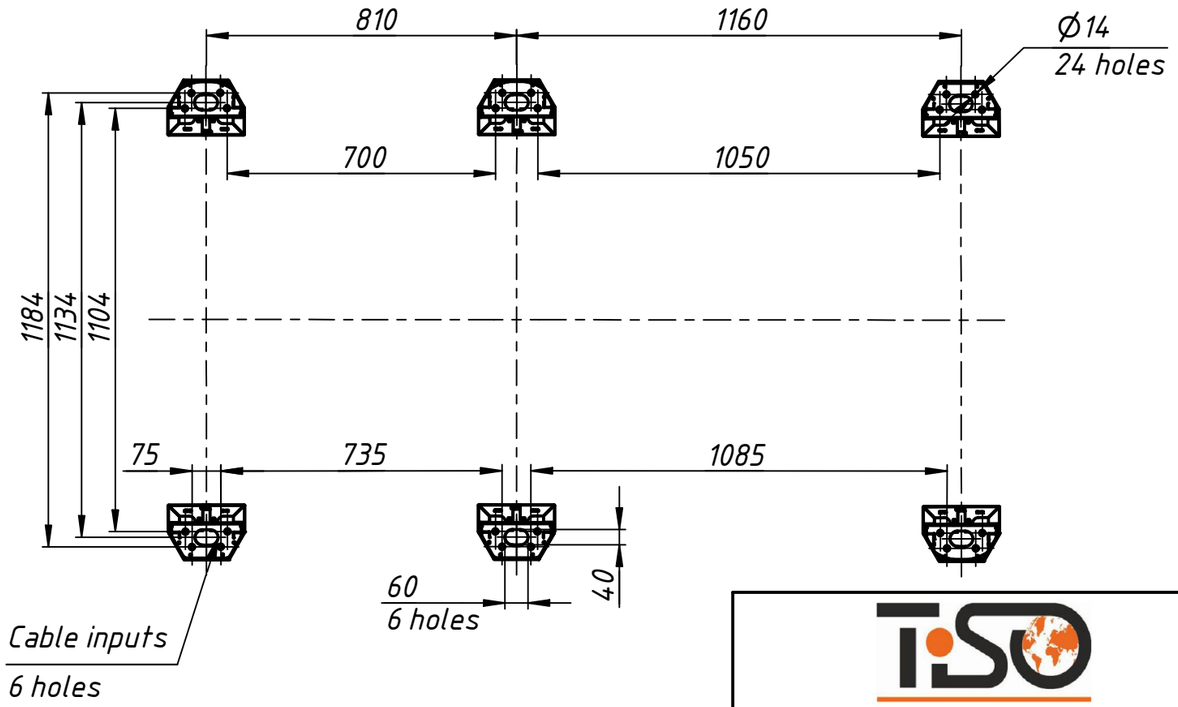

1. * Dimensions for passage width 550 mm.
2. ** Dimensions for passage width 900 mm.

Speed gates
Sweeper-WP-HG
550+900

www. tiso.global